SA-1391
SMA Einbaubuchse / U.FL

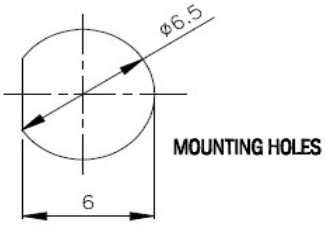

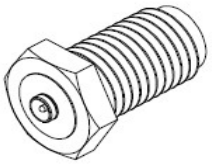

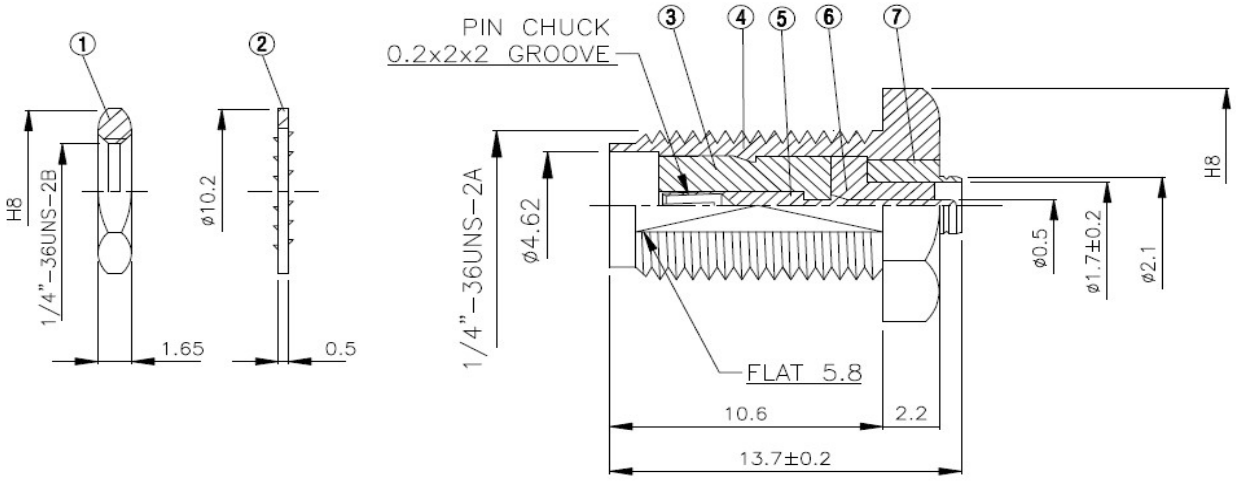

NO	DESCRIPTION	MATERIAL	Q'TY	FINISH
1	NUT	BRASS	1	NICKEL
2	WASHER	BRASS	1	NICKEL
3	INSULATION 1	TEFLON	1	TEFLON
4	BODY	BRASS	1	NICKEL
5	PIN	BE CU	1	GOLD
6	INSULATION 2	TEFLON	1	TEFLON
7	BODY	BRASS	1	GOLD